MAGNUM™
PRODUCTS LLC

PORTABLE GENERATOR
MPG 3800

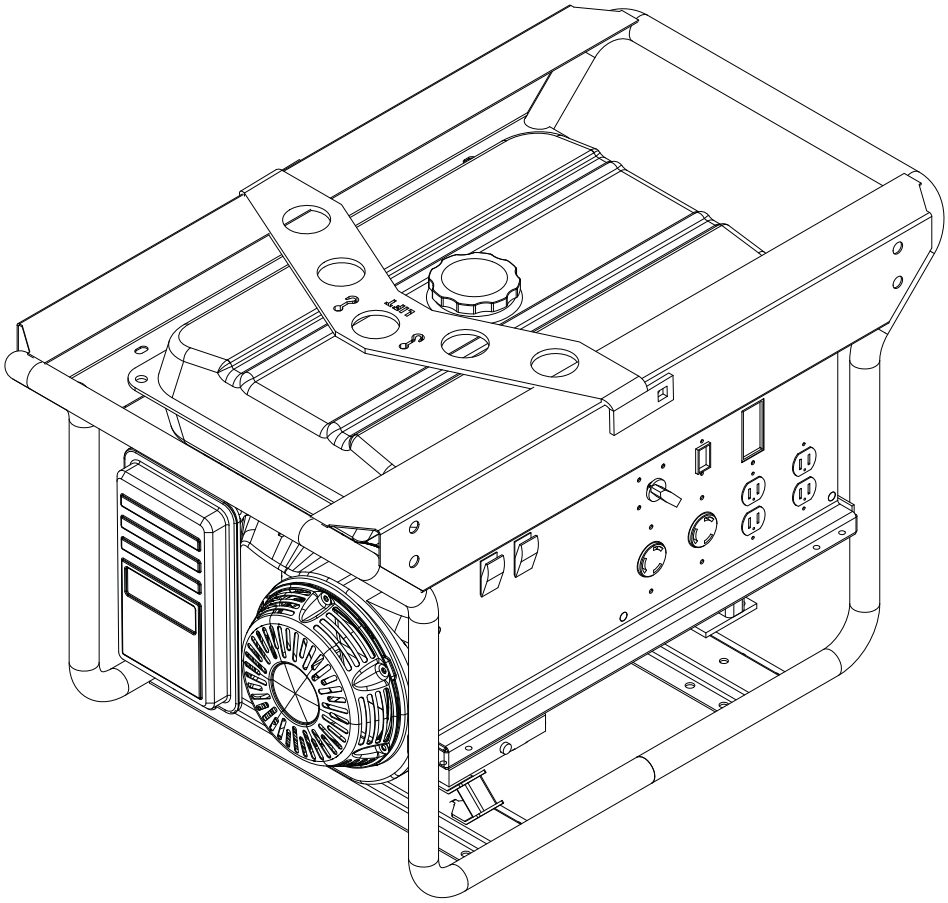

OPERATING/PARTS MANUAL

This manual provides information and procedures to safely operate and maintain the engine and generator. For your own safety and protection from physical injury, carefully read, understand, and observe the safety instructions described in this manual. *The information contained in this manual was based on machines in production at the time of publication. Magnum Products LLC reserves the right to change any portion of this information without notice.*

DO NOT MODIFY or use this equipment for any application other than which it was designed for.

Magnum Products LLC recommends that a trained and licensed professional perform all electrical wiring and testing functions. Any wiring should be in compliance with the United States National Electric Code (NEC), state and local codes and Occupational Safety and Health Association (OSHA) guidelines.

Keep a copy of this manual with the unit at all times. Additional copies are available from Magnum Products LLC. An engine operator's manual was also supplied with the unit at the time of shipment from the factory. The manual provides detailed operation and maintenance procedures for the engine. Additional copies of this manual are available from the engine manufacturer.

MAGNUM PRODUCTS LLC

215 Power Drive • Berlin, WI 54923

U.S.A.

Phone: 920-361-4442

FAX: 920-361-4416

Toll Free: 1-800-926-9768

www.m-p-llc.com

Engine Make: _____

Engine Serial Number: _____

Engine Model Number: _____

Generator Make: _____

Generator Model Number: _____

Generator Serial Number: _____

Unit Model Number: _____

Unit Serial Number: _____

⚠ WARNING

CALIFORNIA PROPOSITION 65 WARNING:

Engine exhaust and some of its constituents are known to the state of California to cause cancer, birth defects and other reproductive harm.

TABLE OF CONTENTS

	Page
INTRODUCTION	2
TABLE OF CONTENTS	3
SAFETY NOTES	4
OPERATING SAFETY	4
ENGINE SAFETY	5
ELECTRICAL SAFETY	5
UNIT SERIAL NUMBER LOCATION	6
SAFETY SYMBOL SUMMARY	7
SPECIFICATIONS	8
COMPONENT LOCATIONS	9
CONTROL PANEL COMPONENTS	10
GROUNDING THE GENERATOR	11
CONNECTING ELECTRICAL LOADS	11
GFCI TEST INSTRUCTIONS	11
PREVENTION OF OVERLOAD	11
WATTAGE CONSUMPTION OF EQUIPMENT	12
USE OF EXTENSION CORDS	12
EXTENSION CORD SELECTION CHART	13
ADDING ENGINE OIL	13
ADDING GASOLINE	13
STARTING THE ENGINE	14
POWERING THE LOADS	14
STOPPING THE ENGINE	15
MAINTENANCE SCHEDULE	16
DAILY MAINTENANCE CHECKS AND TIPS	16
LIFTING THE GENERATOR	16
UNIT DECALS	17
CONTROL PANEL ASSEMBLY	18 - 19
FRAME AND FUEL TANK ASSEMBLY	20 - 21
ENGINE AND GENERATOR ASSEMBLY	22 - 23
AC WIRING DIAGRAM	24
DC WIRING DIAGRAM	25

SAFETY NOTES

This is the safety alert symbol. It is used to alert you to potential personal injury hazards. Obey all safety messages that follow this symbol to avoid possible injury or death.

This manual contains DANGERS, WARNINGS, CAUTIONS, NOTICES and NOTES which must be followed to prevent the possibility of personal injury or death, damage to equipment, or improper service. The following formatting options will apply when calling the readers attention to the DANGERS, WARNINGS, CAUTIONS, NOTICES and NOTES.

⚠ DANGER

INDICATES A HAZARDOUS SITUATION WHICH, IF NOT AVOIDED, WILL RESULT IN DEATH OR SERIOUS INJURY.

⚠ WARNING

Indicates a hazardous situation which, if not avoided, could result in death or serious injury.

⚠ CAUTION

Indicates a hazardous situation which, if not avoided, may result in minor or moderate injury.

NOTICE

Indicates a hazardous situation which, if not avoided, may result in property or equipment damage.

Note: *Notes contain additional information important to a procedure and will be found within the regular text body of this manual.*

OPERATING SAFETY

Before using the generator be sure you read and understand all of the instructions! This equipment was designed for specific applications; DO NOT modify or use this equipment for any application other than which it was designed for. Equipment operated improperly or by untrained personnel can be dangerous! Read the operating instructions and familiarize yourself with the location and proper use of all instruments and controls. Inexperienced operators should receive instruction from someone familiar with the equipment before being allowed to operate or set up the generator. The following points should be practiced at all times:

- The area immediately surrounding the generator should be dry, clean, and free of debris.
- **NEVER** start a unit in need of repair.
- **NEVER** operate the generator if any of the following conditions exist during operation:

    1. Noticeable change in engine speed.
    2. Loss of electrical output.
    3. Equipment connected to the generator overheats.
    4. Sparking occurs.
    5. Engine misfires or there is excessive engine/generator vibration.
    6. Operating on a combustible surface.
    7. Protective covers are loose or missing.
    8. If the ambient air temperature is above 110° F.

ENGINE SAFETY

Internal combustion engines present special hazards during operation and fueling! Failure to follow the safety guidelines described below could result in severe injury or death. Read and follow all safety warnings described in the engine operator's manual. A copy of this manual was supplied with unit when it was shipped from the factory.

- **DO NOT** run engine indoors or in an area with poor ventilation unless exhaust hoses are used. Engine exhaust contains carbon monoxide, a deadly, odorless and colorless gas which, if inhaled, can cause nausea, fainting or death. Make sure engine exhaust cannot seep into closed rooms or ventilation equipment.
- **DO NOT** fill fuel tank near an open flame, while smoking, or while engine is running. **DO NOT** fill tank in an enclosed area with poor ventilation.
- **DO NOT** operate with the fuel tank cap loose or missing.
- **DO NOT** touch or lean against hot exhaust or engine parts.
- **DO NOT** clean air filter with gasoline or other types of low flash point solvents.
- Keep hands, feet and loose clothing away from moving parts on the generator and engine.
- If equipped with electric start, generator batteries contain sulfuric acid which can cause severe injury or death. Sulfuric acid can cause eye damage, burn flesh or eat holes in clothing. Protective eye wear and clothing are necessary when working on or around the battery. Always disconnect the NEGATIVE (-) battery cable from the corresponding terminal before performing any service on the engine or other components.

ELECTRICAL SAFETY

While the engine is running, potentially lethal voltages are present at the outlets located on the control panel. Failure to follow the safety guidelines described below could result in severe injury or death.

- Only a qualified and licensed electrician should make connections to the generator.
- **NEVER** wash the unit with any high pressure hoses or power washers.
- **NEVER** allow water to accumulate around the base of the unit. If water is present, DO NOT service!
- **NEVER** service electrical components if clothing or skin is wet. If the unit is stored outside, check the engine and generator for any moisture and dry the unit before use.
- **NEVER** start the engine with any of the circuit breakers switched on or with any loads connected to the control panel. Serious generator damage will result.
- **ALWAYS** disconnect the NEGATIVE (-) battery cable from the corresponding terminal before performing any service on the engine, generator or any other components. Remove the NEGATIVE (-) battery cable from the corresponding terminal if the unit is to be stored or transported.

UNIT SERIAL NUMBER LOCATION

Refer to the location illustrated below to find the unit ID tag. Important information, such as the unit serial and model number are found on this tag. Record the information from this tag, so it is available if the tag is lost or damaged. When ordering parts or requesting technical service information, you may be asked to specify this information.

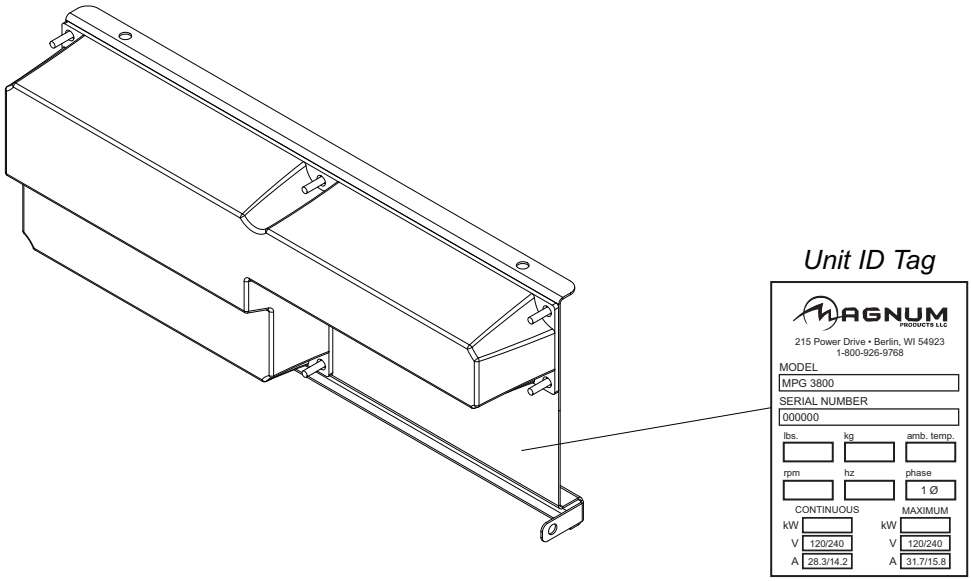

SAFETY SYMBOL SUMMARY

This equipment has been supplied with numerous safety and operating decals. These decals provide important operating instructions and warn of dangers and hazards. Replace any missing or hard-to-read decals and use care when washing or cleaning the unit. Decal placement and part numbers can be found in the parts section of this manual. Below is a summary of the intended meanings for the symbols used on the decals.

	Safety alert symbol; Used to alert you to potential personal injury hazards.		Asphyxiation hazard; Operate in well ventilated area.
	Hot surface(s) nearby.		Dangerous voltage may be present. Disconnect battery before servicing.
	Two-person lift only.		Use unleaded gasoline only.
	Check oil level daily.		Unit electrical ground.
	Stop engine before fueling.		Fire/explosion hazard; Keep open flames away from unit.
	Lift here only.		Read and understand the supplied operator's manual before operating unit.

SPECIFICATIONS

Read this manual carefully before attempting to use this generator. The potential for property damage, personal injury or death exists if this equipment is misused or installed incorrectly. Read all of the manuals included with this unit. Each manual details specific information regarding items such as set-up, use and service requirements. SPECIFICATIONS ARE SUBJECT TO CHANGE WITHOUT NOTICE.

MAGNUM MODEL **MPG 3800**

Generator Specifications

Generator Frequency ..... 60 Hz
Maximum Output Watts 3800
Continuous Output Watts 3400
Main Circuit Breaker ..... 16 Amp-2 pole
Maximum Amps 32A

Engine Specifications

Engine Make ..... Honda
Engine Model GX240
Power - net prime* ..... 7.1 hp (5.3 kW)
Fuel Consumption - net prime ..... 1.47 gph (5.56 Lph)
Approximate Run time ..... 9.7 hours
Recoil Start ..... Yes
Electric Start ..... No

Capacities

Fuel Tank ..... 6.6 gal. (25 L)

Weights and Dimensions

Dry Weight ..... 185 lbs (84 kg)
Operating Weight ..... 226 lbs (103 kg)
Dimensions ..... 36.8 x 21.4 x 21.5 in
Dimensions ..... 934.7 x 543.6 x 546.1 mm
Dimensions, Wheel Kit Option ..... 36.8 x 27.0 x 27.0 in
Dimensions, Wheel Kit Option ..... 934.7 x 686.0 x 686.0 mm

* The power rating of the engine indicated in this document is the net power output tested on a production engine for the engine model and measured in accordance with SAE J1349 at 3600 rpm. Mass production engines may vary from this value. Actual power output for the engine installed in the final machine will vary depending on numerous factors, including the operating speed of the engine in application, environmental conditions, maintenance, and other variables.

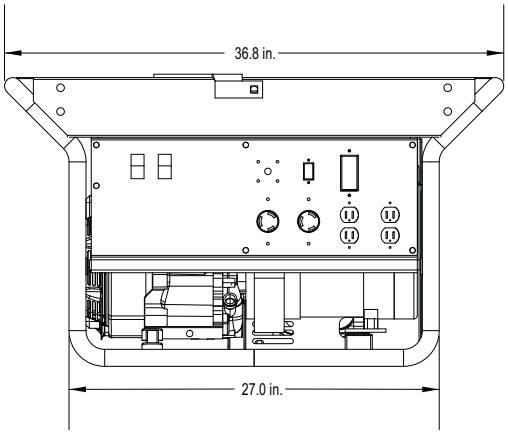

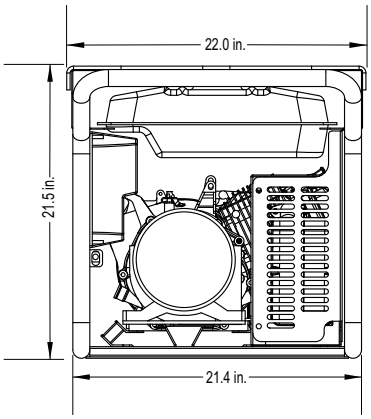

COMPONENT LOCATIONS

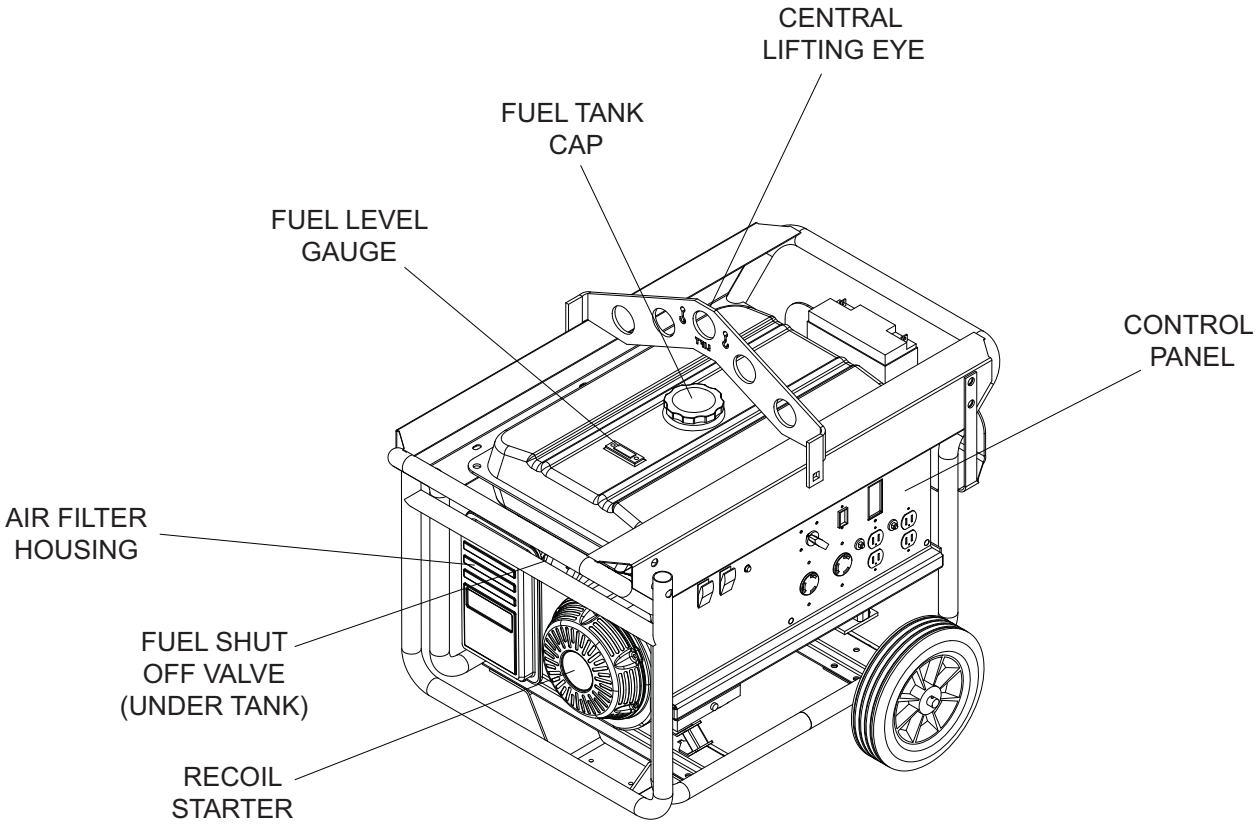

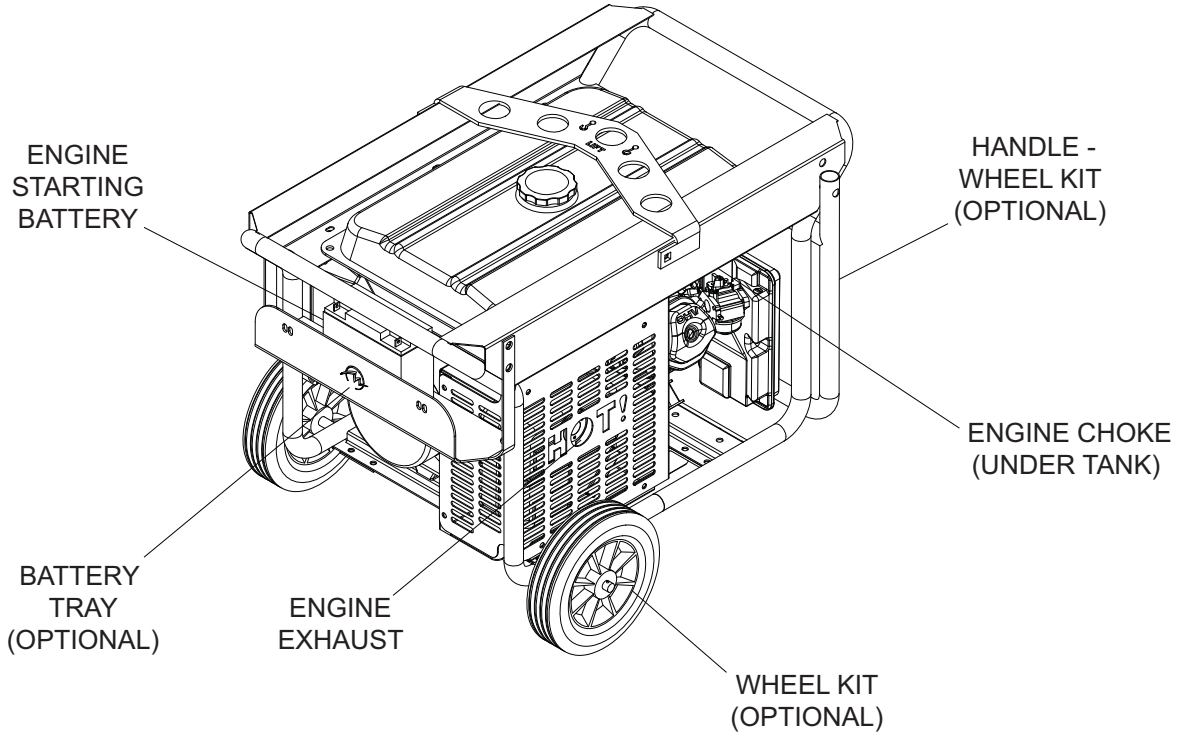

CONTROL PANEL COMPONENTS

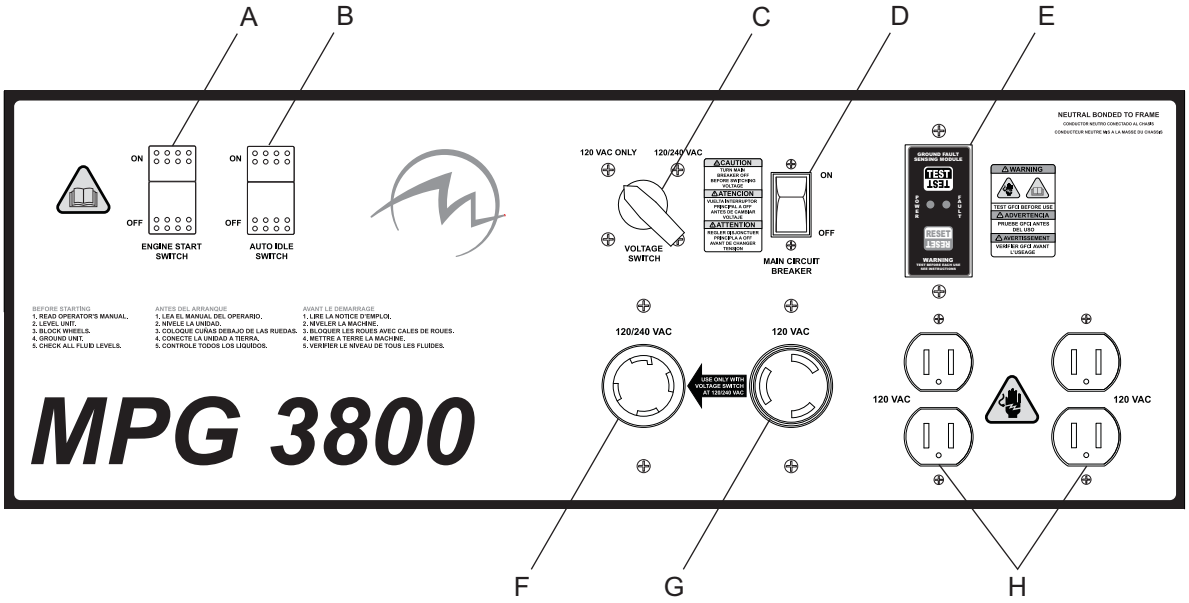

A. **ENGINE START SWITCH:** This switch must be in the ON position to start the engine. To stop the engine, place switch in OFF position.

B. **AUTO IDLE SWITCH:** When this switch is engaged, the engine speed will return to idle whenever the generator is not under load.

C. **VOLTAGE SWITCH:** This switch changes voltage on the L14-20R outlet from 120V to 240V.

D. **MAIN CIRCUIT BREAKER:** This unit contains a 16A circuit breaker.

E. **GFCI TEST MODULE:** This module is the ground fault circuit interrupter to protect all electrical outlets.

F. **120/240V TWIST-LOCK CONVENIENCE OUTLET:** This L14-20R outlet is used to connect additional loads or equipment to the generator.

G. **120V TWIST-LOCK CONVENIENCE OUTLET:** This L5-30R outlet is used to connect additional loads or equipment to the generator.

H. **120V DUPLEX CONVENIENCE OUTLETS:** These 120V outlets are used to connect additional loads or equipment to the generator.

GROUNDING THE GENERATOR

The National Electrical Code (NEC) requires that the generator be properly connected to an approved ground source. The ground connection for this unit is located on the generator support leg.

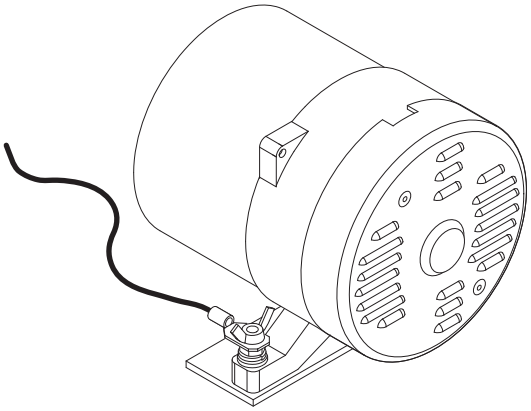

GROUND SOURCE LOCATION

CONNECTING ELECTRICAL LOADS

Allow the engine to warm-up before connecting any devices to the unit. Connect the desired 120 or 240 volt AC, single phase, 60 Hz electrical loads.

GFCI TEST INSTRUCTIONS

NOTICE:
ALWAYS test GFCI outlets before connecting any loads to the generator.

The device green LED is “ON” and circuit breaker is at “ON” position.

1. Press “TEST” button. Green LED should go out and red LED should come on. The circuit breaker should trigger to off position.

2. If the LED or breaker do not trip or change state, DO NOT USE! Consult an electrician for assistance.

3. Press “RESET” button. Red LED should turn off and green LED should turn on.

4. Manually reset circuit breaker to on position to restore circuit power.

PREVENTION OF OVERLOAD

Exceeding wattage capacity can result in damage to the generator and to the connected electrical devices. Adhere to the following to prevent exceeding wattage capacities:

- Calculate the total wattage of all electrical devices to be connected at one time to the generator.
- The total should **NOT** be greater than the generator’s wattage capacity.
- The wattage from various devices can be found on the device’s data plate or decal. See the Wattage Consumption of Equipment on page 12 for a listing of devices and their running watts.
- If you cannot locate the running wattage for a device, multiply volts times ampere rating.

WATTAGE CONSUMPTION OF EQUIPMENT

DEVICE	APPROXIMATE RUNNING WATTS
Air Conditioner (12,000 BTU)**	1700
Air Conditioner (24,000 BTU)**	3800
Air Conditioner (40,000 BTU)**	6000
Battery Charger (20 Amp)	500
Belt Sander (3”)	1000
Chain Saw	1200
Circular Saw (6-1/2”)	800 to 1000
Compressor (1 hp)**	2000
Compressor (3/4 hp)**	1800
Compressor (1/2 hp)**	1400
Disc Sander (9”)	1200
Edge Trimmer	500
Electric Nail Gun	1200
Electric Range (per element)	1500
Furnace Fan (3/5 hp)**	875
Garage Door Opener**	500 to 750
Hand Drill	250 to 1100
Hedge Trimmer	450
Impact Wrench	500
Jet Pump**	800
Lawn Mower	1200
Light Bulb	100
Oil Burner on Furnace	300
Oil Fired Space Heater (140,000 BTU)	400
Oil Fired Space Heater (85,000 BTU)	225
Oil Fired Space Heater (30,000 BTU)	150
Paint Sprayer, Airless (1/3 hp)**	600
Paint Sprayer, Airless (handheld)	150
Radio	50 to 200
Submersible Pump (1-1/2 hp)**	2800
Submersible Pump (1 hp)**	2000
Submersible Pump (1/2 hp)**	1500
Sump Pump**	800 to 1050
Table Saw (10”)**	1750 to 2000
Weed Trimmer	500

**Allow three times the listed watts for starting these devices.

USE OF EXTENSION CORDS

Long extension cords used to connect devices to the generator result in a loss of voltage. The longer the extension cord, the greater the voltage loss. Refer to the chart on page 13 to help select proper cable size when using extension cords.

⚠ WARNING

Damaged extension cords can cause electrical shock, resulting in serious injury or death.

- **DO NOT** use split, frayed or wore cords.
- **ALWAYS** replace damaged cords immediately.

EXTENSION CORD SELECTION CHART

CURRENT (AMPS)	LOAD IN WATTS	VOLTS	MAXIMUM CABLE LENGTH (FT)			
			#10	#12	#14	#16
5	600	120 / 240	225 / 455	140 / 285	90 / 180	60 / 120
10	1200	120 / 240	115 / 225	70 / 140	45 / 90	- / -
15	1800	120 / 240	75 / 151	47 / 95	30 / 60	- / -
20	2400	120 / 240	57 / 110	36 / 70	- / -	- / -

Keep extension cords as short as possible, preferably less than 15 feet long, to prevent voltage drop and possible overheating of wires. Use only high quality, well-insulated, three-wire, grounded cord sets to connect equipment to the generator.

OPERATING THE GENERATOR

Before operating the generator, the engine oil level will need to be checked and gasoline will need to be added to the unit.

ADDING ENGINE OIL

1. Place the pump on a firm, level surface.
2. Remove the oil fill cap/dipstick. Clean the area around the oil fill cap and wipe the dipstick clean.
3. Insert the dipstick in oil filler neck. Do not thread into filler neck. Remove the dipstick, and check the oil level.
3. If oil is needed, carefully add oil to the bottom of the oil filler neck, below the threads. While filling, stop to check oil level. DO NOT overfill.
4. Insert oil fill cap/dipstick and secure tightly.
5. Check engine oil level before each use of the pump.

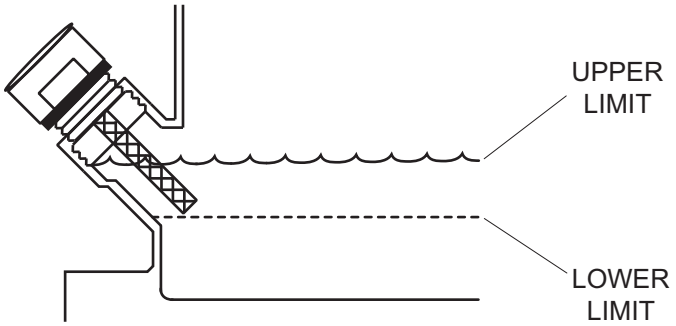

ADDING GASOLINE

1. Remove the gasoline cap.
2. Carefully fill the fuel tank with UNLEADED gasoline. DO NOT use premium gasoline. DO NOT overfill. Allow approximately 1/2” tank space for fuel expansion.

⚠ WARNING

DO NOT fill fuel tank near an open flame, while smoking, or while engine is running.
DO NOT fill tank in an enclosed area with poor ventilation.

3. Tighten gasoline cap after filling fuel tank.

STARTING THE ENGINE

⚠ WARNING

Never start or stop engine with electrical devices plugged into the receptacles AND devices turned on.

1. Unplug all electrical loads from the unit's receptacles before starting the engine.
2. Make sure the generator is on a firm, level surface, away from any overhangs, open windows, vents or doors.
3. Check the fuel and engine oil levels.
4. Turn the main circuit breaker off.
5. Open the fuel shut-off valve.
6. Turn the engine start switch on.
7. If the engine is cold or has not been run recently, locate the choke lever, just above the air cleaner housing on the left side of the generator. Pull the choke lever toward you to engage.
8. On recoil start engines, grasp the t-handle of the pull rope and pull the rope in a rapid, steady motion to start the engine. On electric start models, push the engine start push-button located on the control panel to start the engine.
9. If the choke was used, allow the engine to run with it on for a few moments before pushing the lever back in.

POWERING THE LOADS

⚠ WARNING

Never connect any equipment in need of repair to the generator. DO NOT use extension cords that are worn, cut, or damaged.

1. Connect any equipment directly to the generator outlets or extension cords. For the 120/240V NEMA L4-30A outlet, select the proper output voltage for the outlet and the equipment that will be connected to it.

⚠ WARNING

DO NOT connect 240 volt loads to 120 volt receptacles. DO NOT connect 3-phase loads or 50 hz loads to the generator.

2. Switch the main circuit breaker on. The equipment connected to the generator is now ready to use.
3. If the main circuit breaker is overloaded, it will "trip" or switch off. Verify that the loads connected to the generator are within the generator's output range. Refer to the unit specifications on page 8 for maximum and continuous output watts.
4. Reset the breaker by switching it on. If the breaker trips again, reduce the load to the generator and reset the circuit breaker.

STOPPING THE ENGINE

1. Shut off all loads and unplug electrical loads from the control panel receptacles.

⚠ WARNING

Never start or stop the engine while electrical devices are plugged in and turned on.

2. Turn the idle control switch off.

3. Switch the main circuit breaker to the off position.

3. Let the unit run for 3-5 minutes with no load to allow stabilization of the internal temperatures of the engine and generator.

4. Turn the unit off.

5. Close the fuel shut-off valve.

MAINTENANCE SCHEDULE

The following maintenance schedule should be followed to ensure proper performance of the unit.

ITEM	DAILY	20 HRS.	50 HRS.	100 HRS.	300 HRS.
Visual walk around inspection	◆				
Check engine oil level	◆				
Check air filter	◆				
Change engine oil		◆*		◆	
Clean air filter			◆		
Check and adjust spark plug				◆	
Clean muffler/spark arrester				◆	
Replace spark plug					◆
Check and adjust idle speed					◆
Check and adjust valve clearance					◆
Replace air filter					◆
Clean combustion chamber	Every 500 hours				
Clean fuel tank and filter	Every 1 year				
Check fuel tube	Every 2 years				

* After initial break-in, change the engine oil and filter. Oil change interval can then be extended to 100 hours.

DAILY MAINTENANCE CHECKS AND TIPS

⚠ WARNING

DO NOT service the generator unless you have the proper tools and are mechanically proficient.

- Check the engine oil level daily before starting engine.
- **DO NOT** start the generator if the oil level is low! The normal operating level for the engine oil is when oil is present on the crosshatch pattern of the dipstick. Add oil to the engine if it does not start or if oil is not present on the dipstick when tested.
- **DO NOT** overfill the crankcase.
- Consult the engine OPERATION AND MAINTENANCE MANUAL for the proper grade of oil, including spe cial operating conditions such as a change in season or climate.
- Service the generator more frequently when used in dusty areas.

LIFTING THE GENERATOR

A large central lifting eye is located on the top of the generator and the eye is connected to the frame of the unit. Attach a sling or hook directly to the lifting eye only if the devices are in good condition and the equipment being used to raise the unit has sufficient capacity. Approximate weights can be found on page 8. Always remain aware of others around you when moving or lifting the generator.

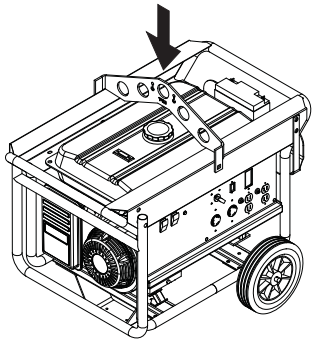

UNIT DECALS

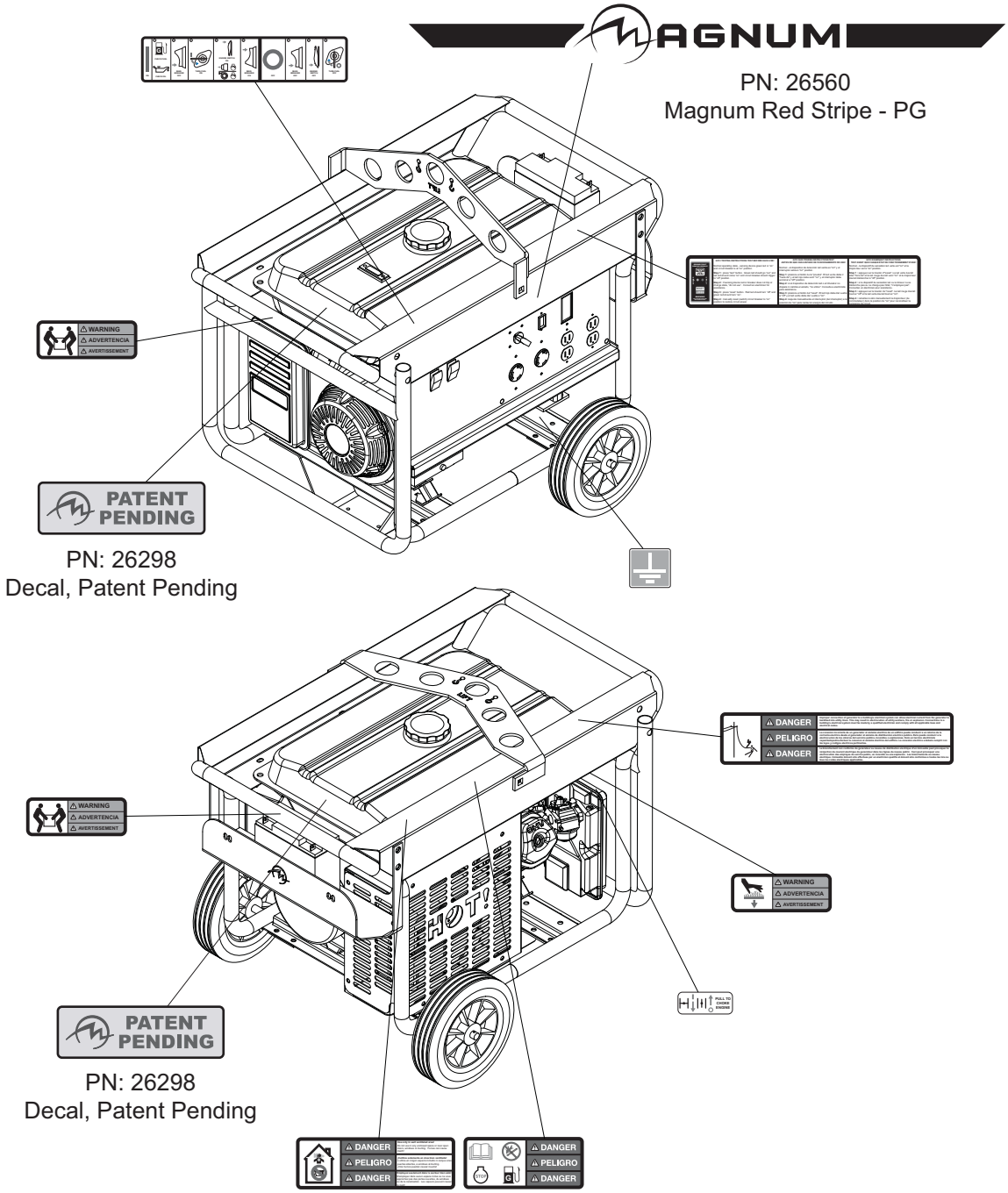

Note: *All safety and operating decals shown above are located on decal sheet 26332.*

CONTROL PANEL ASSEMBLY

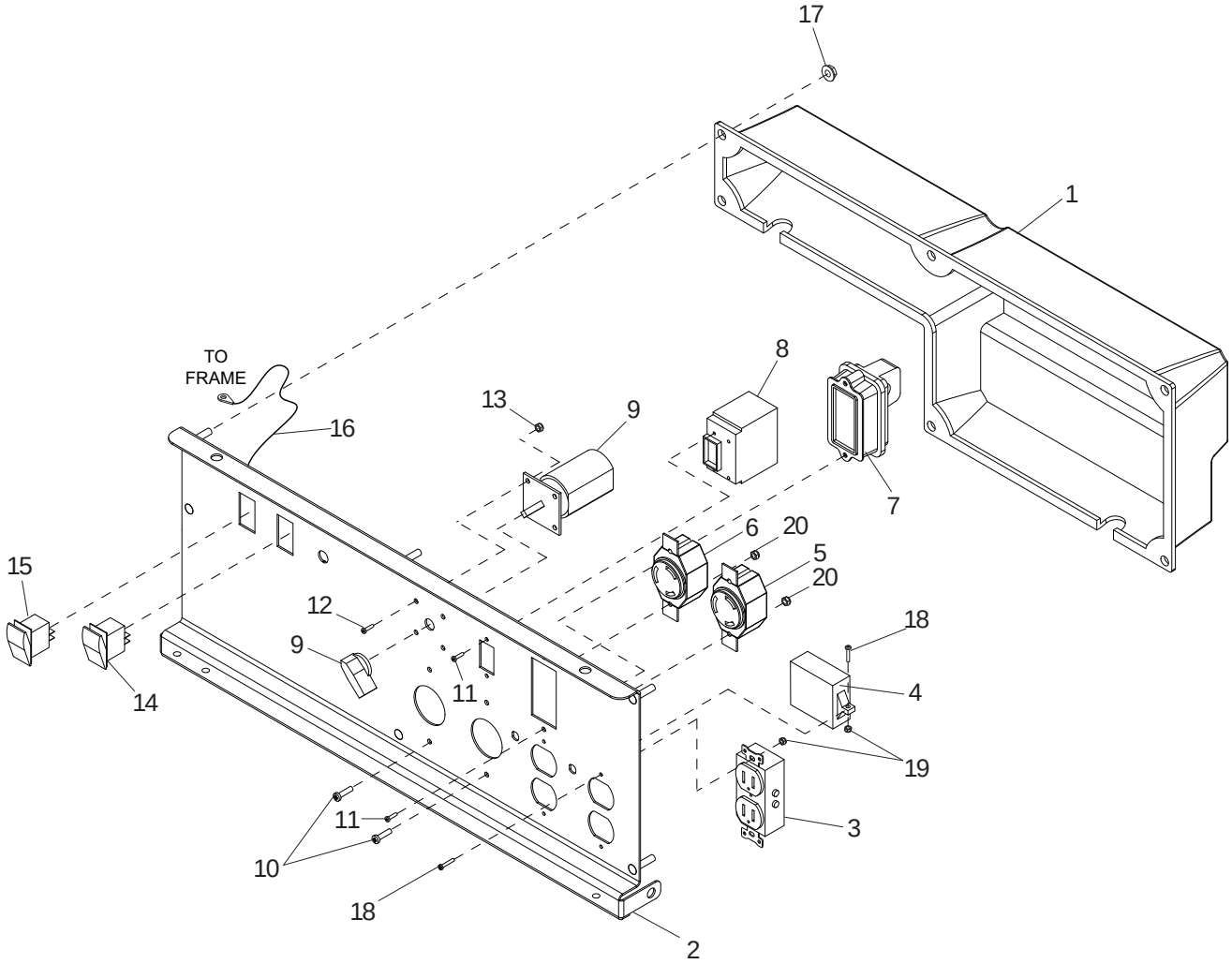

ITEM NO.	PART NO.	QTY	DESCRIPTION
1	26213	1	Panel, control - rear housing
2	24986R	1	Panel, control
3	65888	2	Receptacle, 120V/20A duplex-black
4	65878	1	Module, auto idle
5	65487	1	Receptacle, 120V/30A twist
6	65942	1	Receptacle, 240V/20A twist
7	65886	1	Module, GFI sensing
8	65941	1	Breaker, 16A, 240V
9	26233	1	Switch, 120V/240V
10	60398	4	Screw, 10-32X.500 pan phil 316 SS
11	60181	4	Screw, M3-0.50X5 pan phil
12	60091	4	Screw, M4-0.70X12 pan phil G4.8
13	60051	4	Nut, M4-.70 nylock G8.8
14	65874	1	Switch, rocker - idle select
15	65873	1	Switch, rocker - on/off
16	19211	1	Tether, cable - 10.50 long
17	60161	7	Nut, .250-20 sflg G5
18	60046	5	Screw, 6-32X.750 pan phil G2
19	60728	5	Nut, 6-32 nylk G5
20	60061	4	Nut, 10-32 nylk G5

FRAME AND FUEL TANK ASSEMBLY

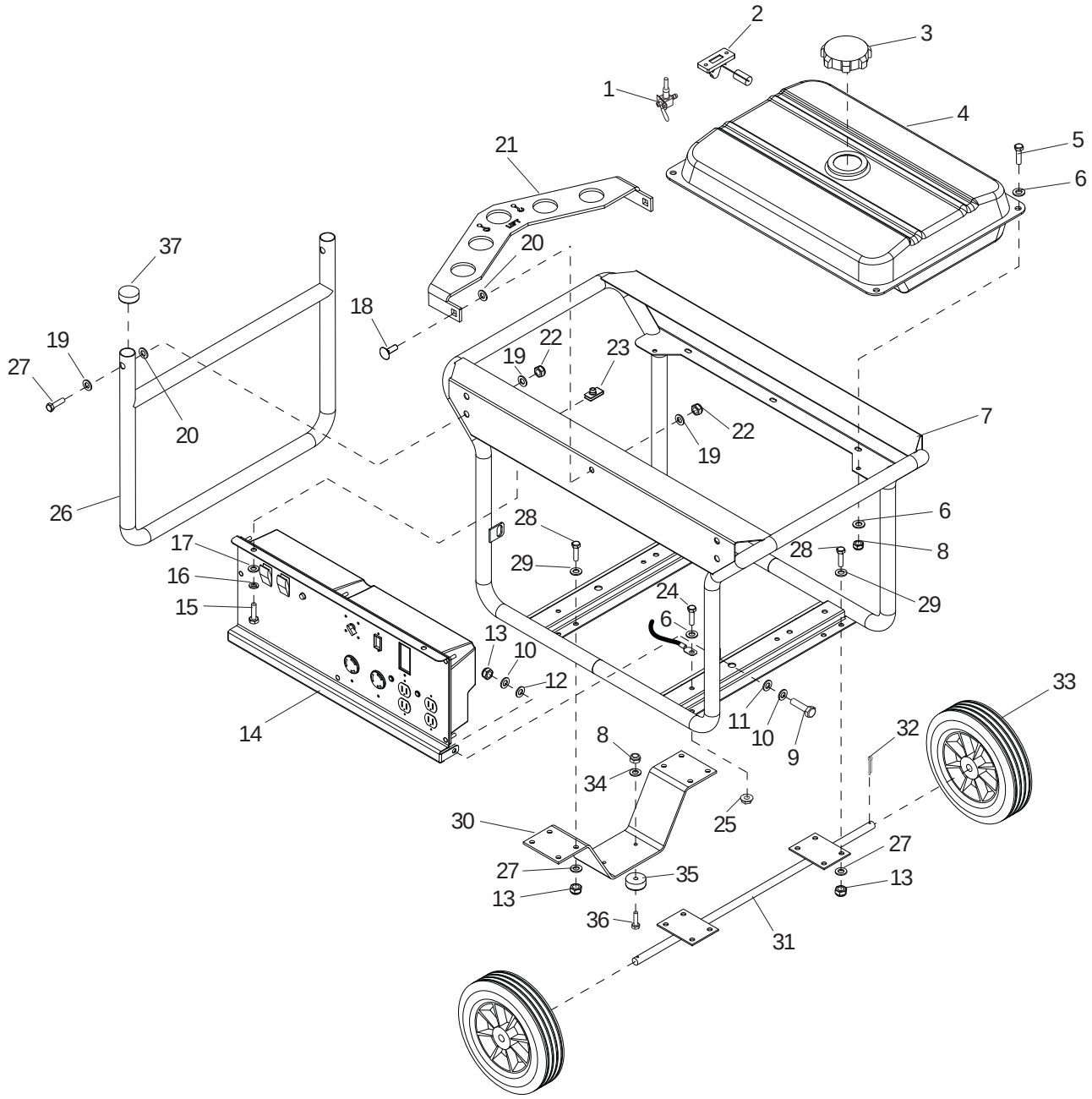

ITEM NO.	PART NO.	QTY	DESCRIPTION
1	26123	1	Valve, fuel tank
2	26122	1	Gauge, fuel tank
3	28495	1	Cap, fuel tank
4	28494	1	Tank, fuel
5	60393	4	Screw, .250-20X1.000 hx hd
6	60243	9	Washer, flat .250 USS
7	24916B	1	Weldment, frame
8	60144	6	Nut, .250-20 nylock
9	60690	2	Screw, .375-16X1.000 hx hd SS
10	60698	4	Washer, flat .375 SS
11	61120	2	Spacer, shoulder-.375 ID .500 OD .750 SH
12	61088	2	Washer, .500 nylon .750/.062
13	60358	18	Nut, .375-16 nylock
14	26115	1	Assembly, control panel
15	60028	2	Screw, .312-18X1.000 hx hd
16	60271	2	Washer, split lock .312
17	60119	2	Washer, flat .312
18	61142	2	Screw, .500-13X1.500 carriage square
19	60309	6	Washer, flat .500 SAE
20	61152	4	Washer, .500 flat .03TH nylon
21	24920B	1	Bracket, lift eye
22	60307	4	Nut, .500-13 nylock
23	61147	2	Nut, .312-18 U-clip G5 ZY long type
24	60168	1	Screw, .312-18X.750 hx hd G5
25	60095	1	Nut, .312-18 ser flg G5 case hardened
-	50380	.521 ft.	Hose, fuel - .250 ID MPG carb certified (not shown)
-	14216	2	Clamp, hose - SAE (.21-.62) miniature (not shown)
OPTIONAL FEATURES:			
26	26088B	1	Weldment, lifting handle
27	60328	2	Screw, .500-13X2.500 hx hd G5
28	60205	16	Screw, .375-16X1.000 hx hd G5
29	60386	32	Washer, flat .375
30	26085B	1	Bracket, leg - wheel kit
31	26084B	1	Weldment, bracket - wheel kit
32	60321	2	Pin, cotter - .156X1.75
33	24998	2	Wheel, 10 in.
34	60696	2	Washer, .250 flat .625/.050 SS
35	26274	2	Isolator, rubber
36	61025	2	Screw, .250-20X1.500 hx hd SS
37	26271	2	Fitting, plug-1.000 tapered polyethylene

ENGINE AND GENERATOR ASSEMBLY

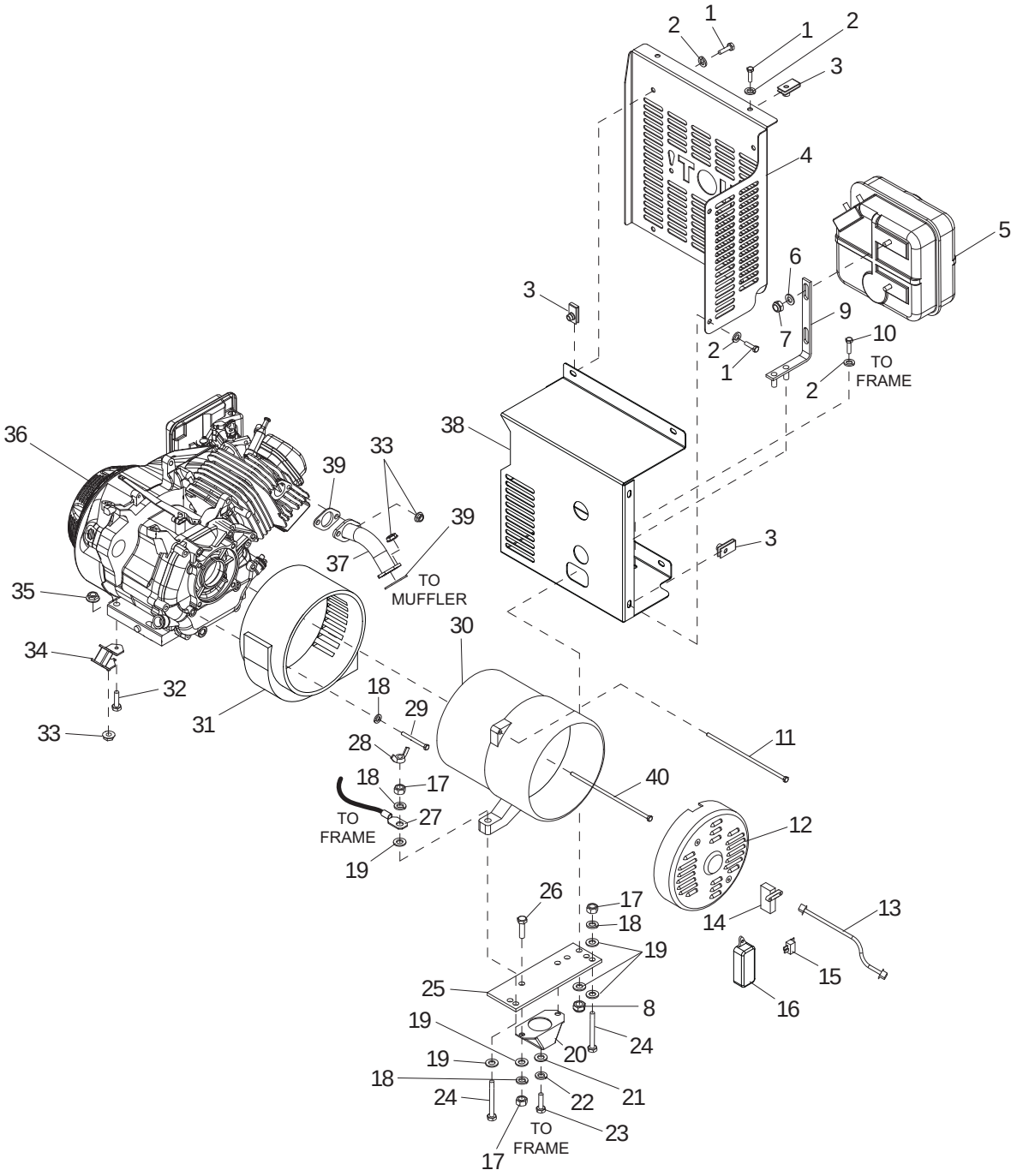

ITEM NO.	PART NO.	QTY	DESCRIPTION
1	60028	8	Screw, .312-18X1.000 hx hd
2	60271	10	Washer, split lock .312
3	61147	8	Nut, .312-18 U-clip G5 ZY long type
4	24922R	1	Muffler guard front
5	24954	1	Muffler
6	60243	2	Washer, flat .250 USS
7	60144	2	Nut, .250-20 nylock
8	60358	2	Nut, .375-16 nylock G5
9	26114BH	1	Bracket, muffler
10	60168	2	Screw, .312-18X.750 hx hd
11	61131	4	Sawafuji - screw, M6 X 120
12	26416	1	Sawafuji - cover, rear - gen end
13	26463	1	Sawafuji - coupler assembly
14	26417	1	Sawafuji - brush holder assembly, generator
15	26418	1	Sawafuji - diode assembly
16	26419	1	Sawafuji - voltage regulator assembly
17	60140	4	Nut, .375-16 hx
18	60206	8	Washer, split lock .375
19	60386	8	Washer, flat .375
20	15241	1	Compression mount
21	60309	1	Washer, flat .500 SAE
22	60276	1	Washer, split lock .500
23	60275	1	Screw, .500-13X1.000 hx hd
24	60478	2	Screw, .375-16X2.000 hx hd G5
25	24923B	1	Bracket, mount
26	60205	2	Screw, .375-16X1.000 hx hd
27	-		Terminal, ground
28	12927	1	Nut, .375-16 wing 316 SS
29	60352	4	Screw, .375-16X1.250 hx hd
30	28492	1	Generator
31	26411	1	Housing, front
32	60972	2	Screw, .312-18X1.500 hx hd
33	60020	6	Nut, M8 ser flg lock
34	28483	2	Isolator, engine
35	60095	2	Nut, .312-18 ser flg
36	28482	1	Engine, 8 hp
37	24956BH	1	Weldment, muffler pipe
38	24921B	1	Weldment, muffler guard rear
39	24988	2	Honda, gasket - exhaust GX240-390
40	61134	1	Sawafuji - screw, rotor 170mm
-	26601	1	Honda, air cleaner element (not shown)
-	26602	1	Honda, air cleaner seal (not shown)
-	26603	1	Honda, solenoid valve assembly (not shown)
-	26604	1	Honda, carb gasket set (not shown)
-	26605	1	Honda, spark plug (not shown)
-	26606	1	Honda, starter return spring (not shown)
-	26607	1	Honda, recoil starter rope (not shown)

AC WIRING DIAGRAM

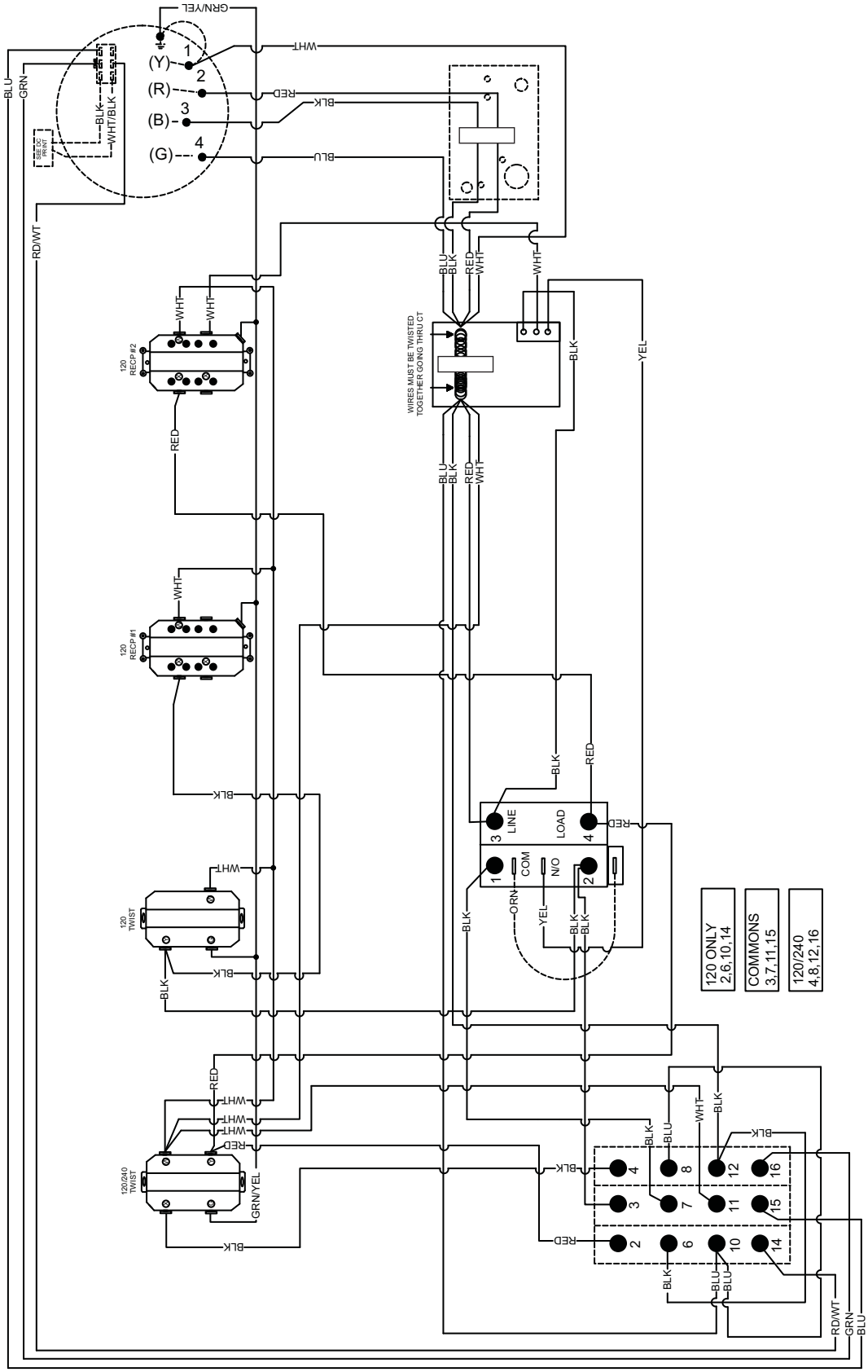

DC WIRING DIAGRAM

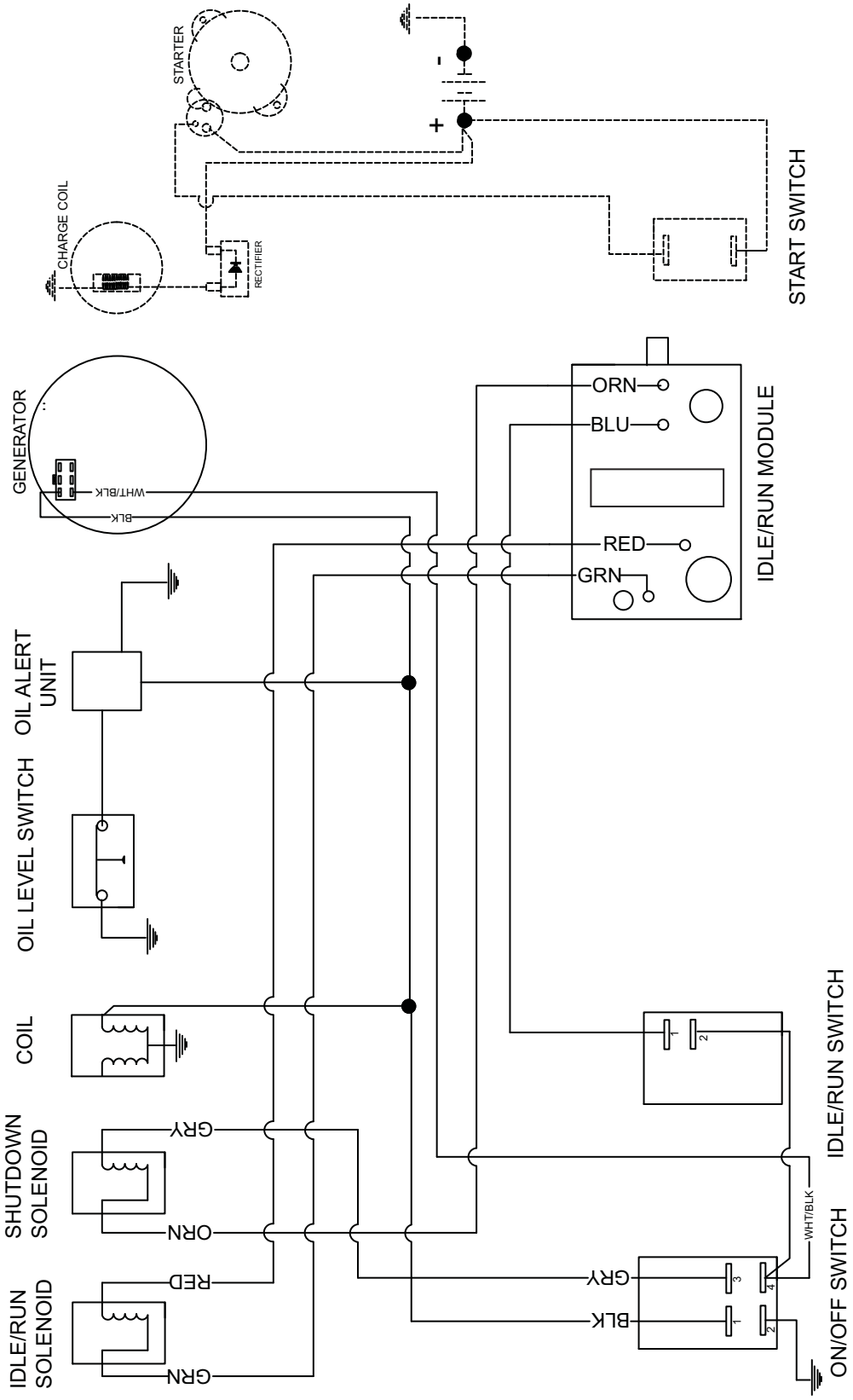

NOTES:

REV: A
PART NO: 26126
01.18.08